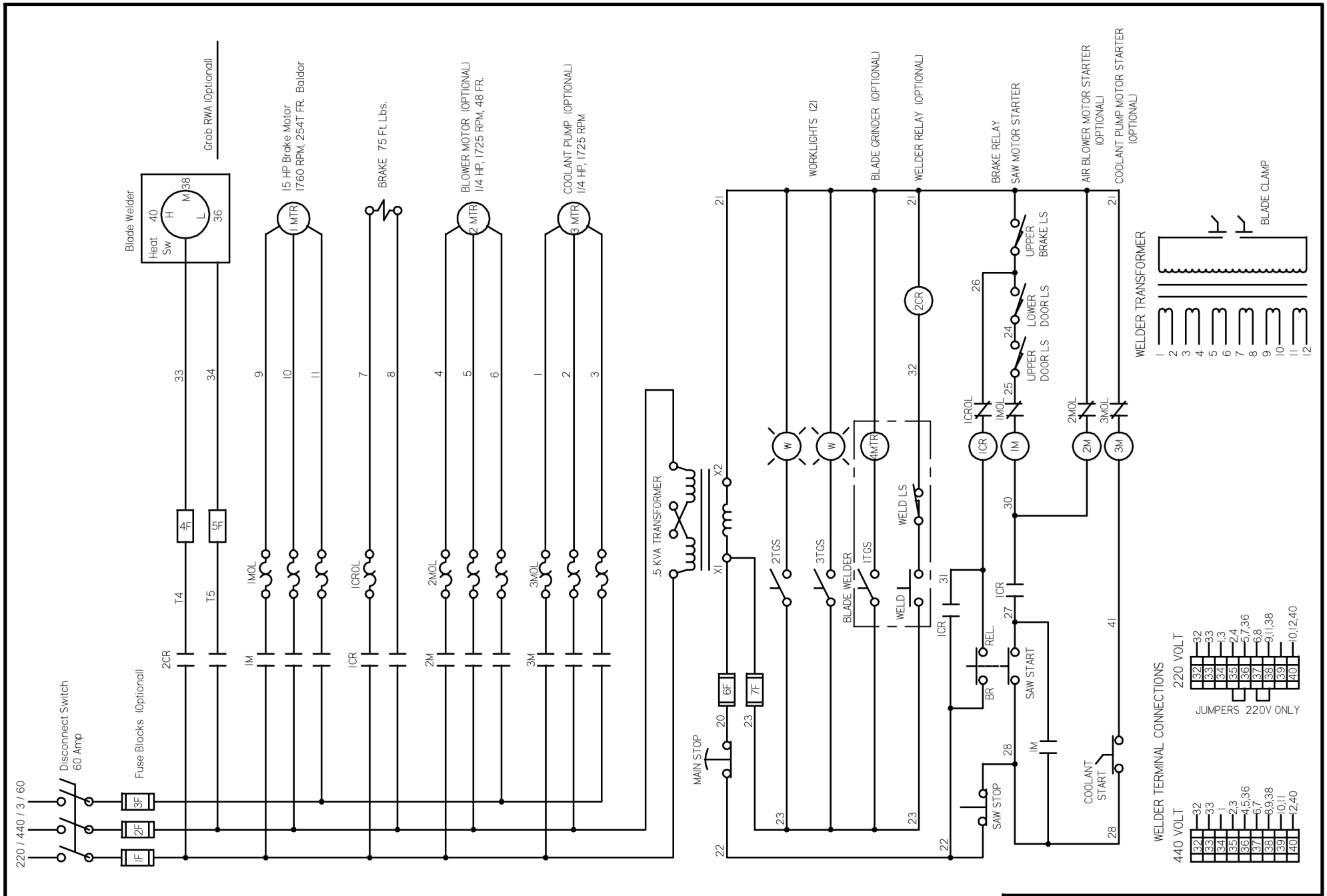

STARTING SERIAL NUMBER 480

NO. REQ'D	PATT. NO.	MATERIAL	HEAT TREATMENT	DRN. SV	TR.	CH.	DWG NO.
				DATE 8-9-01	SCALE	O.K.	HS-964-C

GROB INC. GRAFTON, WIS.

Schematic Wiring Diagram for 6V-36 Band Saw