Item Number	Document Number	Title	Quantity
1	4430V790	Vari-Speed Belt	1
2	1/2-14 NPT	Pipe Cap	1
3	HS-1041-A	Transmission Oil Drain Tube	1
4		1/2 Lock Washer	8
5	1/2-13 x 1 1/2	Hex Head Cap Screw	8
6	HS-939-A	Motor Slide Stop	1
7	HS-930-D	Transmission Assembly	1
8	HS-888-B	Drive Pulley	1
9	7/8-9 x 1 1/2	Hex Bolt	1
10	HS-958-A	Pulley Clamp Washer	1
11	HS-963-D	Concrete Base	1
12	HS-1078-C	Motor Slide Assembly	1
13	RC1315	Woods Variable Speed Sheave	1
14		15HP Baldor Electric Motor	1

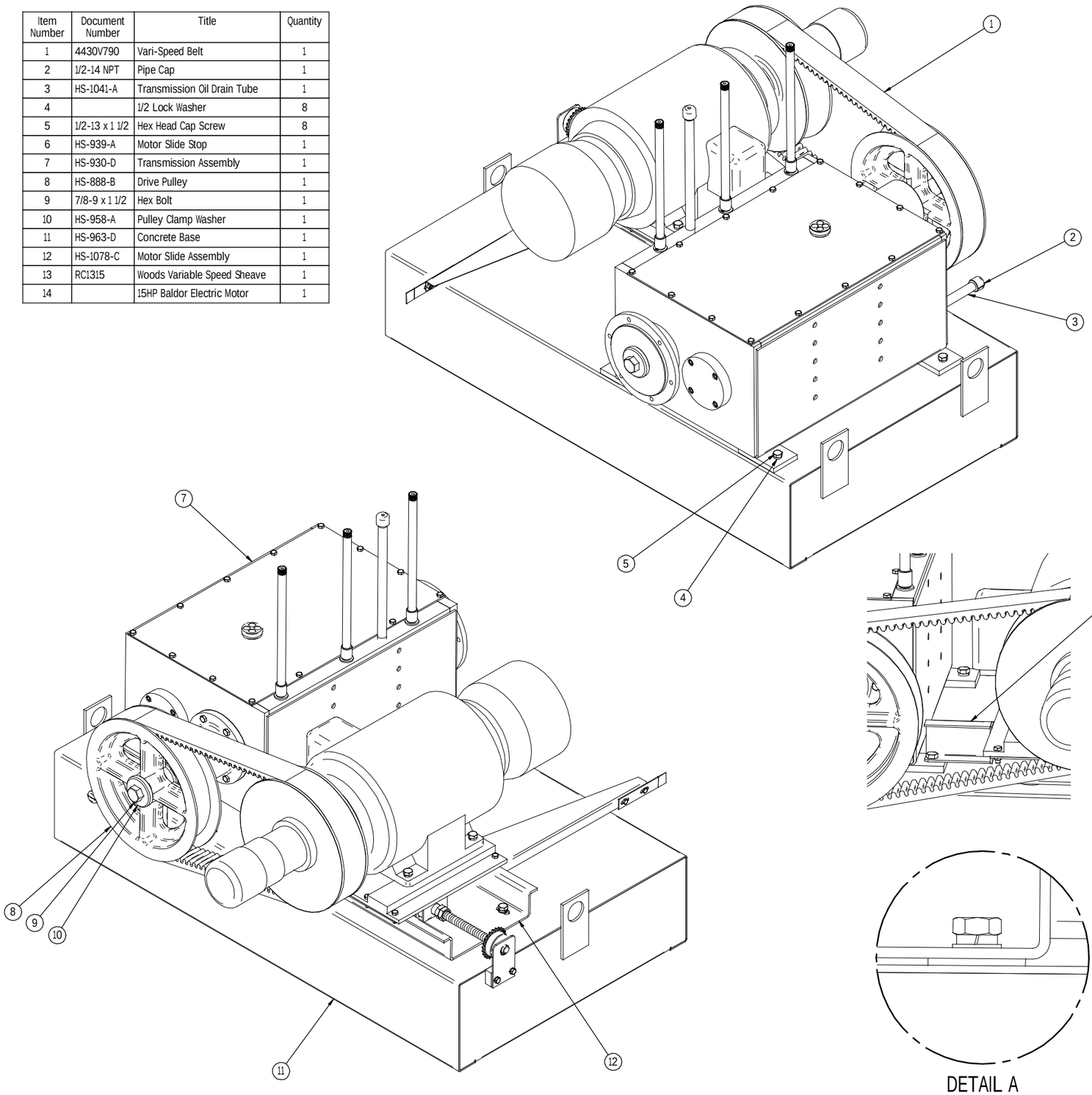

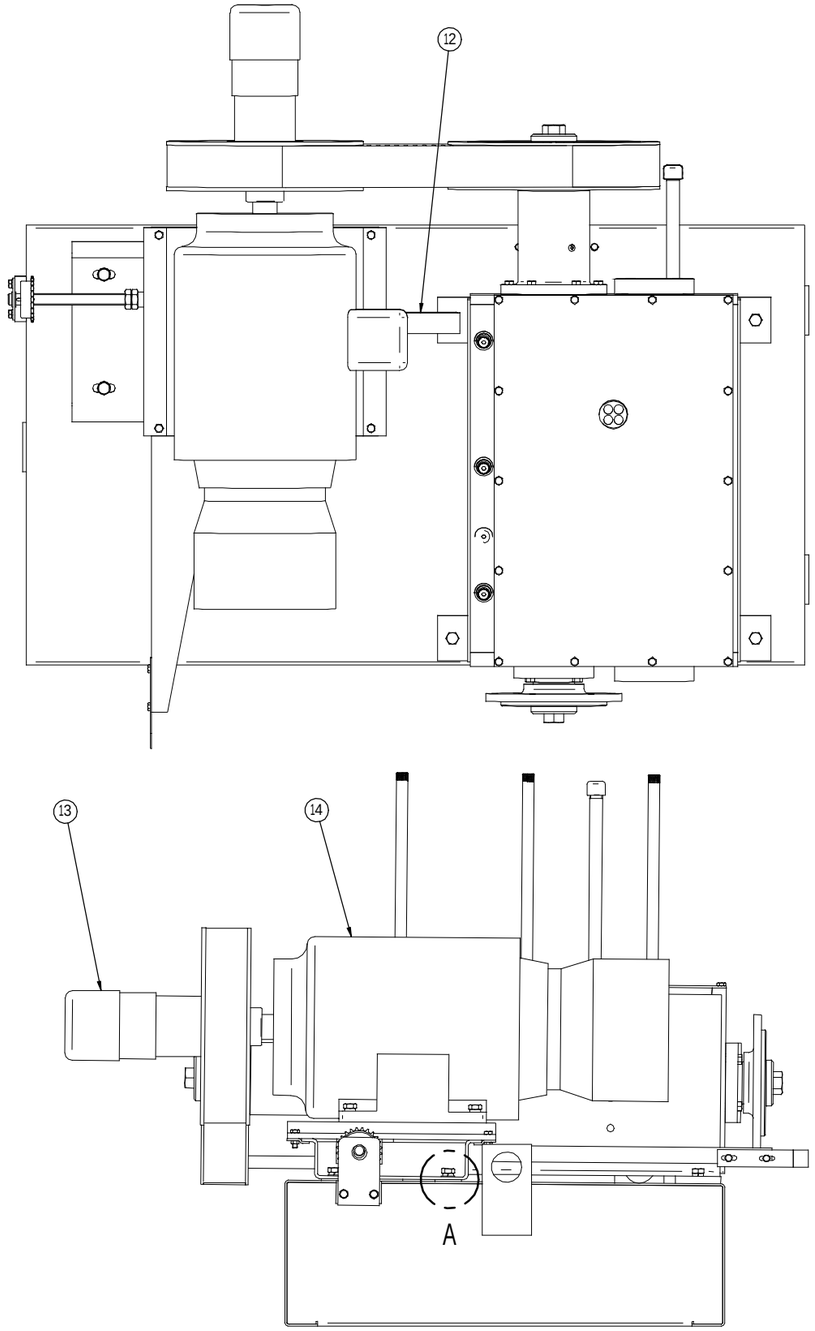

DETAIL A

GROB INC. GRAFTON, WIS.

6V-36 Power Unit Assembly

NO. REQ'D	PATT. NO.	MATERIAL	HEAT TREATMENT	DRN. KS	TR.	CH.	DWG. NO.
One				DATE 9-17-02	SCALE 1:5	O.K.	HS-1037-D