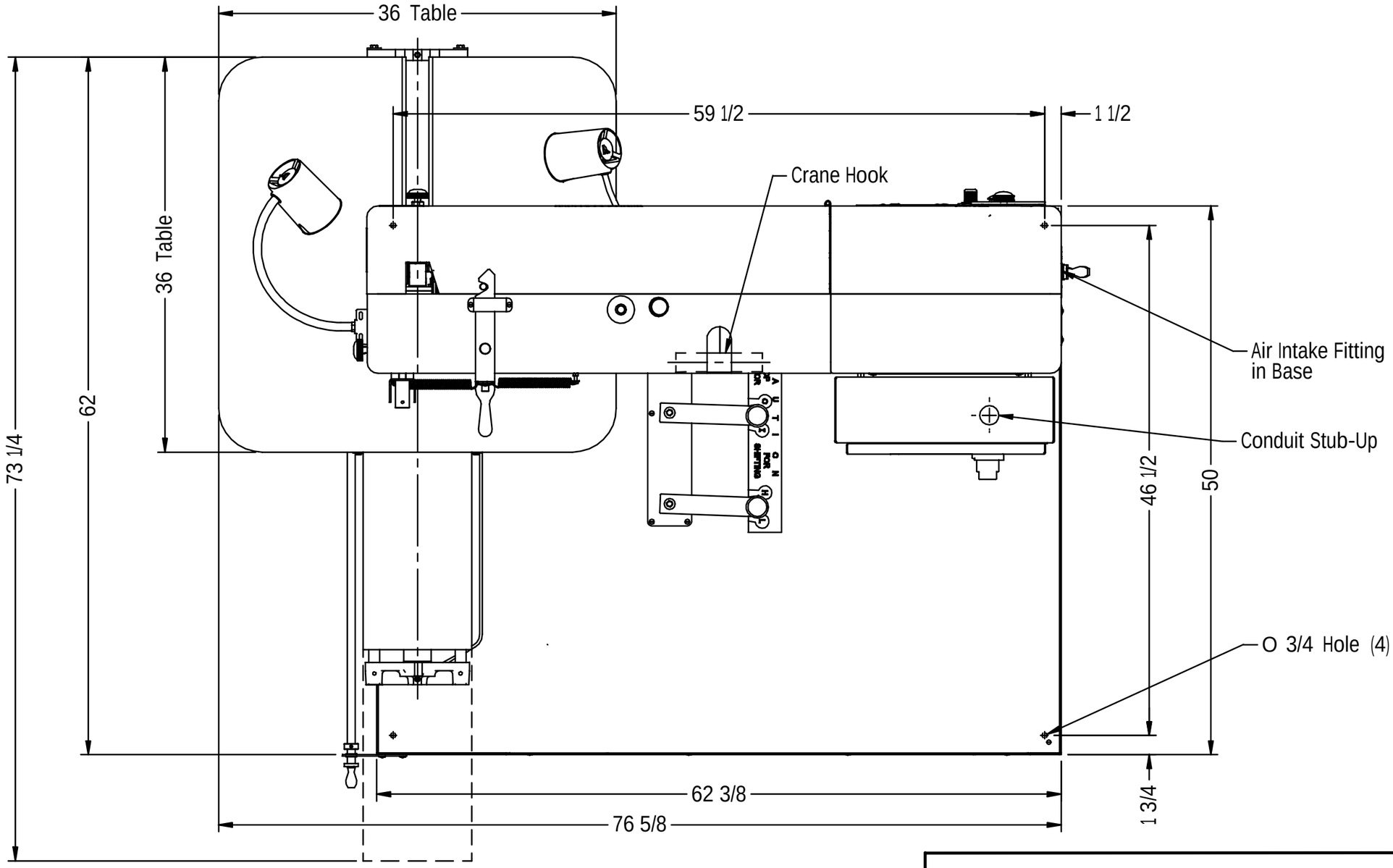

GROB INC. GRAFTON, WIS.

Floor Plan
for 6V-36 Band Saw

NO. REQ'D	PATT. NO.	MATERIAL	HEAT TREATMENT	DRN. W.S.S.	TR.	CH.	DWG. NO.
				DATE 1-6-60	SCALE 1:10	O.K.	X-327-B